Ceramix Blue Bath Shower Mixer Wall Mounted Single Lever Exposed (Non-Thermostatic)

ILLUSTRATED

B9490 CeraMix Blue single lever exposed wall mounted bath shower mixer - non-thermostatic - no kit

ILLUSTRATED PRODUCT DETAILS

Weights

B9490 2.00 KG

Materials

B9490 Chrome Plated Brass

Finishes

B9490 Chrome (AA)

Flow rates

B9490 12 Litres per minute @ 3 bar pressure

Designer

Artefakt Industriekultur

Special Notes

Consideration should be given to safe hot water delivery and the use of an appropriate temperature reduction device. Unregulated flow rate 13.5 litres per minute at 0.1 bar.

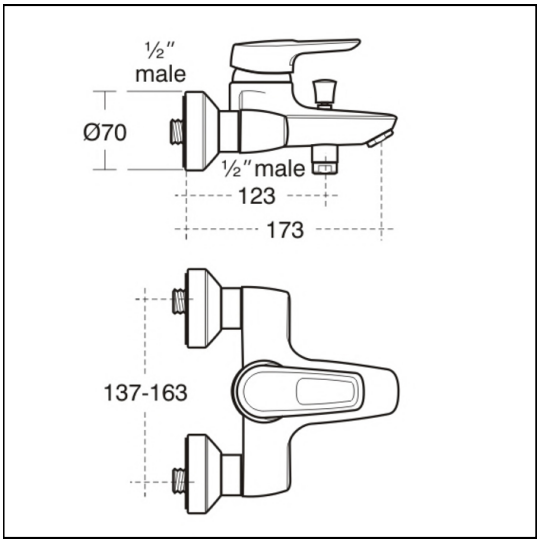

FEATURES

Ideal Standard (UK) Ltd. makes every effort to ensure that the information provided on its website is accurate. However, we cannot guarantee this, and accept no liability for any information or advice given via its website.