Alto Contract Bath 170cm x 70cm With Handgrips No Tapholes

ILLUSTRATED

E7626	Alto Contract 170 x 70cm Idealform Plus+ bath with chrome handgrips - no tapholes
B9674	Alto dual control two hole bath filler
E4797	Unilux Plus+ 170cm front panel for Idealform Plus+
E4831	Unilux Plus+ 70cm end panel
E1486	1 1/2" Bath pop-up waste and overflow
E5800	Bath pop-up waste operating handle and cover only
A5901	TMV Thermostatic mixing valve 22mm

ILLUSTRATED PRODUCT DETAILS

Weights

E7626	35.01 KG
B9674	2.31 KG
E4797	3.65 KG
E4831	2.58 KG
E5800	0.82 KG
A5901	1.70 KG

Materials

E7626	Idealform Plus+
B9674	Chrome Plated Brass
E4797	Acrylic
E4831	Acrylic
E1486	Mixed Material
E5800	Chrome Plated Metal
A5901	Chrome Plated Metal

Finishes

E7626	White (01)
B9674	Chrome (AA)
E4797	White (01)
E4831	White (01)
E1486	Chrome (AA)
E5800	Chrome (AA)
A5901	Chrome (AA)

Capacity

E7626 180.0 litres (to overflow)

Designer

Robin Levien, RDI

Standards

Constructed to EN 198:2008. EN 14516

Special Notes

Consideration should be given to safe hot water delivery and the use of an appropriate temperature reduction device see A5901AA or Part G for guidance.

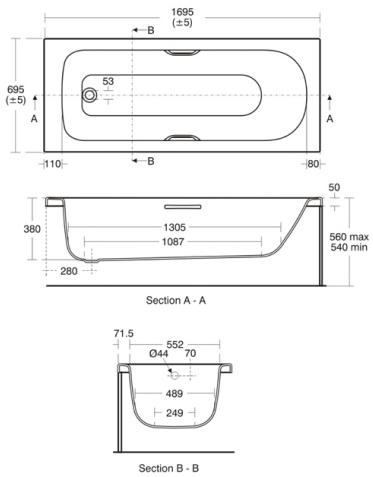

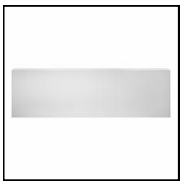

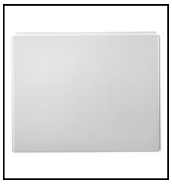

ACCREDITATIONS

E7626(01)

Unified Water Label — 180.0 Litres

FEATURES

E: info@idealspec.co.uk | T: 0870 122 8822 | F: 0870 122 8282 | www.idealspec.co.uk

Ideal Standard (UK) Ltd. makes every effort to ensure that the information provided on its website is accurate. However, we cannot guarantee this, and accept no liability for any information or advice given via its website.