Alto CT 170cm x 70cm Idealform Bath With Handgrips 2 Tapholes

ILLUSTRATED

E7633	Alto CT 170 x 70cm Idealform bath with chrome handgrips & 2 tapholes
B9674	Alto dual control two hole bath filler
E4220	Standard 170cm front panel
E4230	Standard 70cm end panel
E1486	1 1/2" Bath pop-up waste and overflow
E5800	Bath pop-up waste operating handle and cover only
A5901	TMV Thermostatic mixing valve 22mm

ILLUSTRATED PRODUCT DETAILS

Weights

E7633	23.00 KG
B9674	2.31 KG
E4220	2.20 KG
E4230	1.10 KG
E5800	0.82 KG
A5901	1.70 KG

Materials

E7633	Idealform
B9674	Chrome Plated Brass
E4220	Acrylic
E4230	Acrylic
E1486	Mixed Material
E5800	Chrome Plated Metal
A5901	Chrome Plated Metal

Finishes

E7633	White (01)
B9674	Chrome (AA)
E4220	White (01)
E4230	White (01)
E1486	Chrome (AA)
E5800	Chrome (AA)
A5901	Chrome (AA)

Capacity

E7633 180.0 litres (to overflow)

Designer

Robin Levien, RDI

Standards

Constructed to EN 198:2008 EN 14516

Special Notes

Consideration should be given to safe hot water delivery and the use of an appropriate temperature reduction device see A5901AA or Part G for guidance.

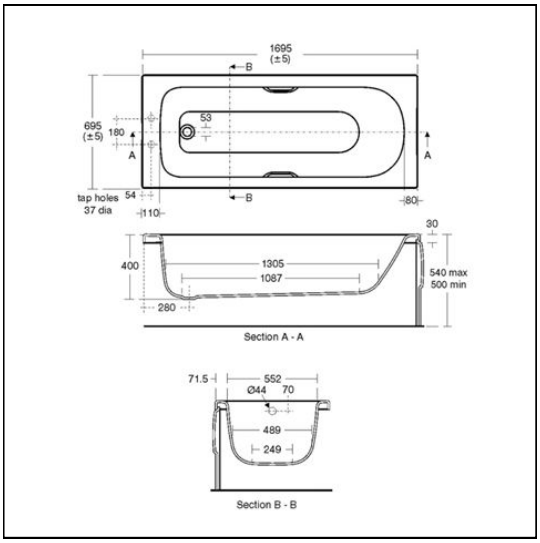

ACCREDITATIONS

E7633(01)

Unified Water Label — 180.0 Litres

FEATURES

Ideal Standard (UK) Ltd. makes every effort to ensure that the information provided on its website is accurate. However, we cannot guarantee this, and accept no liability for any information or advice given via its website.