Contour 21 6 Person Trough With Self Closing Taps and Soap Dispensers

ILLUSTRATED

S2915 Contour 21 stainless steel circular 6 person trough with self closing taps and soap dispensers

ILLUSTRATED PRODUCT DETAILS

Sizes

S2915 l:1000

Materials

S2915 Stainless Steel

Finishes

S2915 Stainless Steel finish (MY)

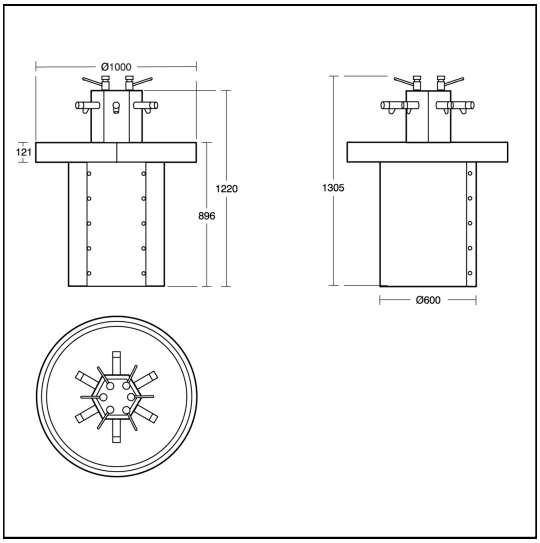

Ideal Standard (UK) Ltd. makes every effort to ensure that the information provided on its website is accurate. However, we cannot guarantee this, and accept no liability for any information or advice given via its website.