Melito 3 Hole SL Bath Shower Mixer With Spout

ILLUSTRATED

A6488 Melito 3 hole SL bath shower mixer with spout

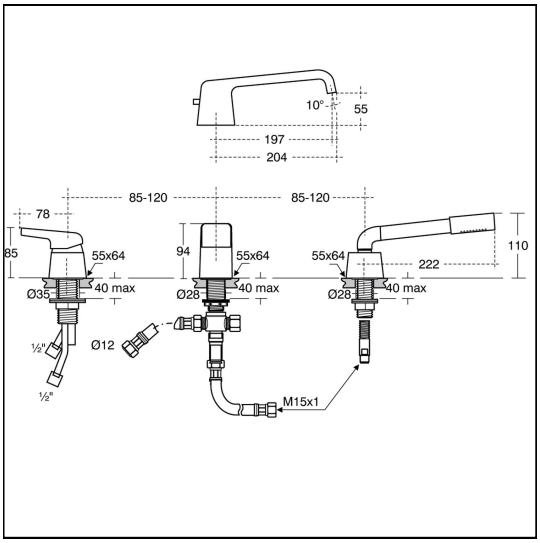

ILLUSTRATED PRODUCT DETAILS

Weights

A6488 5.80 KG

Materials

A6488 Chrome Plated Metal

Finishes

A6488 Chrome (AA)

Designer

Artefakt Industriekultur

Special Notes

Suitable for balanced supplies. G1/2" connections.

Ideal Standard (UK) Ltd. makes every effort to ensure that the information provided on its website is accurate.
However, we cannot guarantee this, and accept no liability for any information or advice given via its website.