White 50cm Washbasin, 3 Taphole

Illustrated

E0009	White 50cm washbasin, 3 tapholes with overflow, no chainstay hole
E0015	White full pedestal
E0061	Silver dual control three hole basin mixer with pop-up waste - lever handles
S8910	Trap 1¼" plastic bottle, 75mm seal, multi-purpose outlet

Configuration options

E0070	Basin fixing set with 14cm rag bolts for solid walls
E0062	Silver dual control three hole basin mixer - no waste - lever handles
S8733	Waste 1¼" brass anti theft swivel plug waste, 80mm slotted tail
E0079	Trap 1¼" Contemporary metal bottle

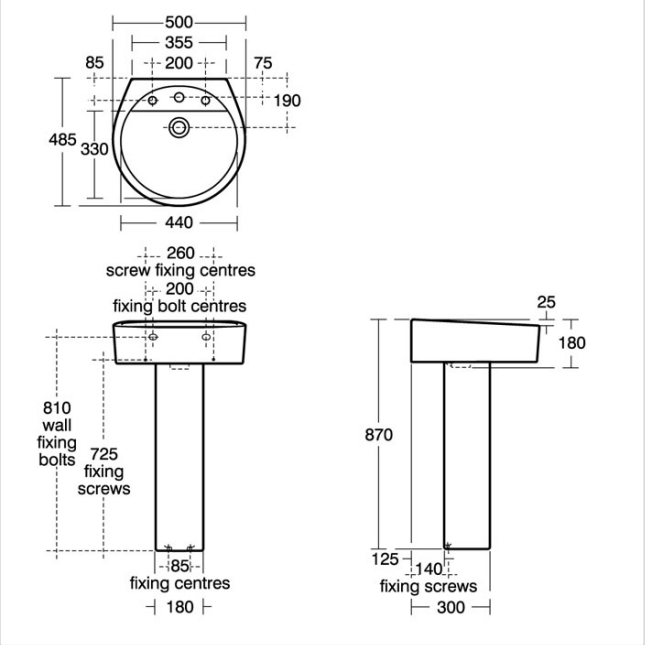

Material

Fine Fireclay

Weights

E0009	14.30KG
E0015	11.52KG
E0061	2.44KG
S8910	0.20KG

Colours

White (01)

Standards

Washbasin to BS EN 14688 & BS EN 31

Special Notes

Washbasin wall mounted using E0070 wall fixing set or full pedestal mounted using 2 screws through the back of the basin (not supplied).

Designer

David Chipperfield

Frequently used applications

Hotels
Public Building
Residential
Sports and Leisure
Office
Pubs and Clubs
Retail

Tel: 0870 122 8822
Fax: 0870 122 8282
Email: info@idealspec.co.uk
Web: www.idealspec.co.uk

Ideal Standard (UK) Ltd. makes every effort to ensure that the information provided on its website is accurate. However, we cannot guarantee this, and accept no liability for any information or advice given via its website.

Powered by IdealSpec

Date created:17/07/2014