Alto Ecotherm Exposed With Low Pressure Shower Pack

ILLUSTRATED

A4999 Alto Ecotherm exposed with low pressure shower pack

ILLUSTRATED PRODUCT DETAILS

Weights

A4999 3.40 KG

Materials

A4999 Chrome Plated Brass

Finishes

A4999 Chrome (AA)

Flow rates

A4999 6.2 Litres per minute @ 3 bar pressure

Designer

Robin Levien, RDI

Special Notes

Optimised for low pressure system.
Inlets 15mm compression fitting with 1/2in BSP male outlet.

Flow rate 6.2 Litres per minute @ 0.2 bar.

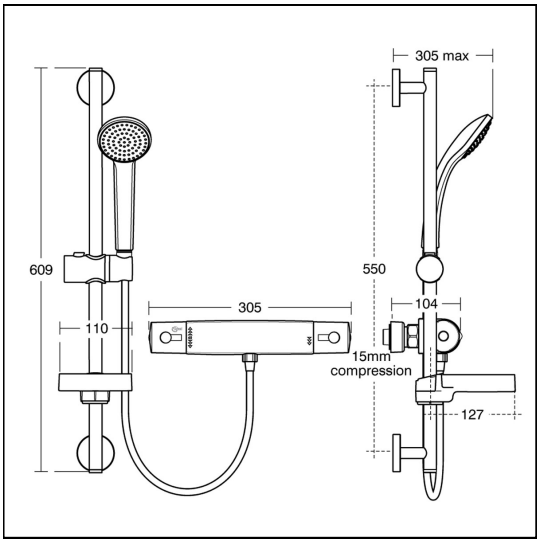

FEATURES

Ideal Standard (UK) Ltd. makes every effort to ensure that the information provided on its website is accurate.
However, we cannot guarantee this, and accept no liability for any information or advice given via its website.