Boost shower mixer built-In and single function Idealrain M1 kit

ILLUSTRATED

A5700 Boost shower mixer built-In and single function Idealrain M1 kit

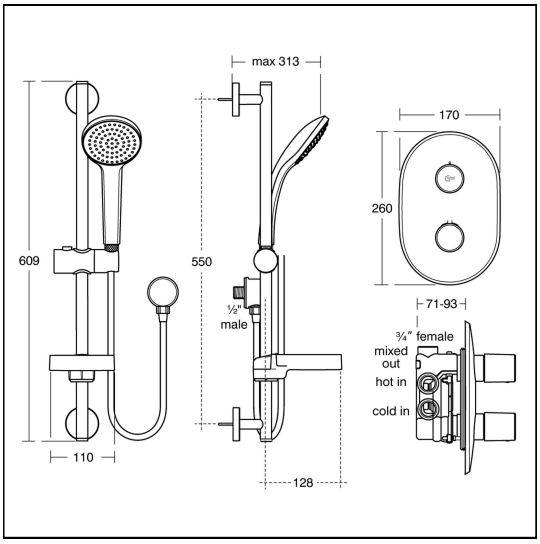

ILLUSTRATED PRODUCT DETAILS

Weights

A5700 5.20 KG

Finishes

A5700 Chrome (AA)

Materials

A5700 Chrome Plated Brass

Special Notes

Venturi cartridge designed for low pressure gravity hot water systems less than 0.3 bar pressure.

Ideal Standard (UK) Ltd. makes every effort to ensure that the information provided on its website is accurate. However, we cannot guarantee this, and accept no liability for any information or advice given via its website.