Alto Bath 170x70cm No Taphole With Handgrips

ILLUSTRATED

E7695	Alto 170 x 70cm Idealform bath with chrome handgrips - no tapholes
E4130	Uniline 170cm front panel
E4140	Uniline 70cm end panel
E1486	1 1/2" Bath pop-up waste and overflow
E5800	Bath pop-up waste operating handle and cover only

OPTIONS

S8830	Waste 1½" bath chain and overflow, plastic plug

ILLUSTRATED PRODUCT DETAILS

Weights

E7695	23.00 KG
E4130	3.60 KG
E4140	1.80 KG
E5800	0.82 KG

Materials

E7695	Idealform
E4130	Acrylic
E4140	Acrylic
E1486	Mixed Material
E5800	Chrome Plated Metal

Finishes

E7695	White (01)
E4130	White (01)
E4140	White (01)
E1486	Chrome (AA)
E5800	Chrome (AA)

Capacity

E7695 195.0 litres (to overflow)

Designer

Robin Levien, RDI

Standards

EN 198:2008

For Illustrative Purposes Only

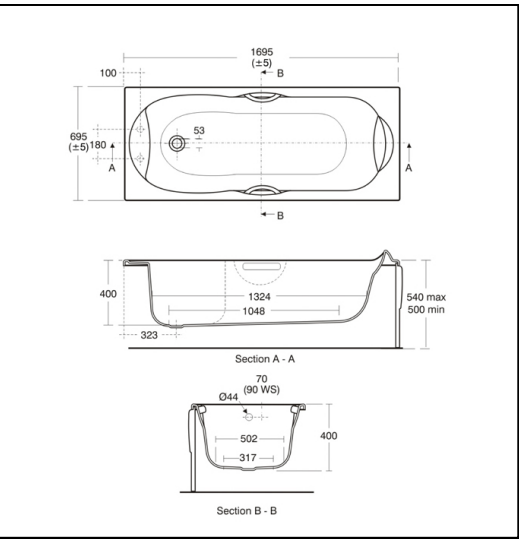

ACCREDITATIONS

E7695(01)

Unified Water Label 195.0 Litres

FEATURES

Ideal Standard (UK) Ltd. makes every effort to ensure that the information provided on its website is accurate. However, we cannot guarantee this, and accept no liability for any information or advice given via its website.