Sentry 21 Wall Mounted WC, Washbasin & Shower Pack, Solid Surface, Tactile Controls, TMV3 Mixing valve included

ILLUSTRATED

S3313 Sentry 21 wall mounted WC, washbasin & shower pack, solid surface material, with cistern and tactile controls

OPTIONS

S3319 Sentry 21 Washbasin stainless steel 100mm wall pipe, for 50mm wall thickness

ILLUSTRATED PRODUCT DETAILS

Weights

S3313 34.39 KG

Finishes

S3313 White (01)

Capacity

S3313 4.5 litres

Flow rates

S3313 5 Litres per minute @ 3 bar pressure

Standards

Tested at HMP test centre at Lindholme.
Home Office/MOJ/MOD/BMA Accreditation
Fire Rated BS4746 - Class 0

Special Notes

Unfortunately we cannot guarantee protection against those intent on self-harm, but we consider that the design and materials used reduce the risks significantly.

Must be installed using specialist Anti-Pick mastic sealant.

Suitable for 150mm wall thickness. For smaller wall thickness please specify the optional 100mm pipe.
For larger wall thicknesses please contact our technical department on the number below.

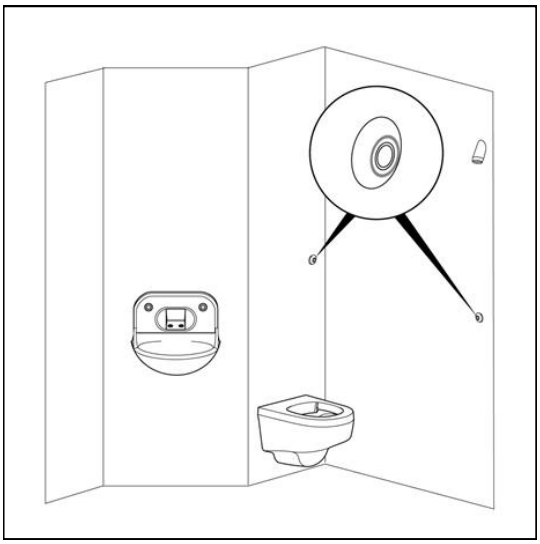

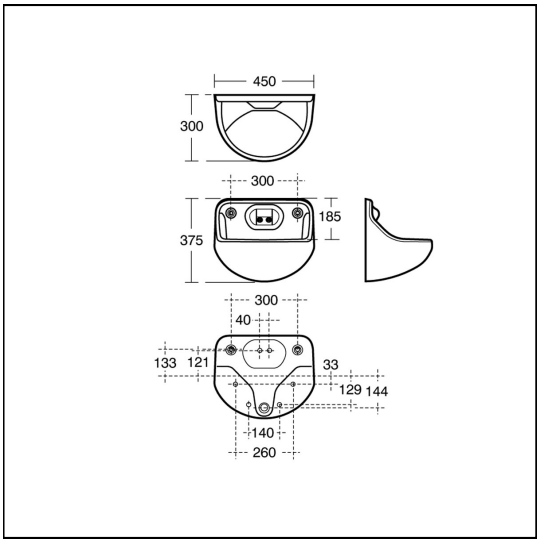

Ideal Standard (UK) Ltd. makes every effort to ensure that the information provided on its website is accurate. However, we cannot guarantee this, and accept no liability for any information or advice given via its website.

Sentry 21 Wall Mounted WC, Washbasin & Shower Pack, Solid Surface, Tactile Controls, TMV3 Mixing valve included

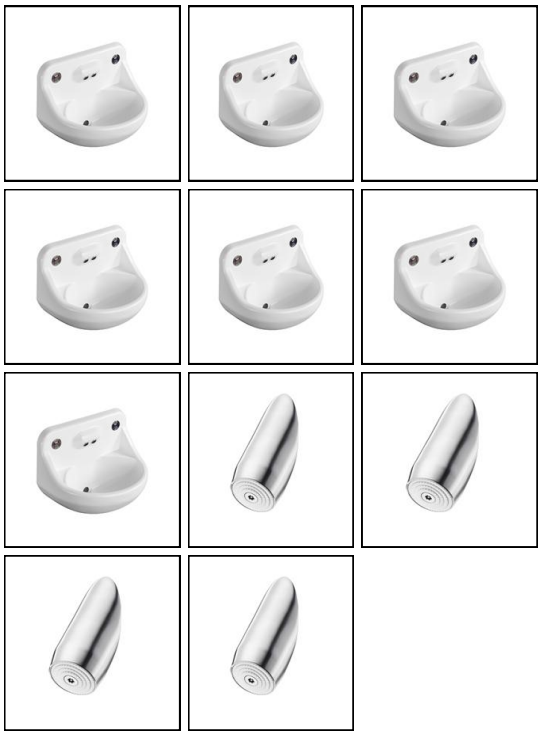

ACCREDITATIONS

FEATURES

Ideal Standard (UK) Ltd. makes every effort to ensure that the information provided on its website is accurate.
However, we cannot guarantee this, and accept no liability for any information or advice given via its website.