# Concept Air Arc 40cm Handrise Basin

## ILLUSTRATED

| | |
|---|---|
| **E1388** | Concept Air Arc 40cm handrise basin, 1 taphole with overflow |
| **E0782** | Concept Air small semi pedestal |
| **E0157** | Wall fixing set |
| **A6588** | Tesi single lever mini basin mixer smooth body and 5 litre per minute eco flow regulator |
| **S8803** | Waste 1¼" Click plug waste, 80mm slotted tail |
| **S8910** | Trap 1¼" plastic bottle, 75mm seal, multi-purpose outlet |

## OPTIONS

| | |
|---|---|
| **E0784** | Concept Air small pedestal |
| **B0671** | Concept Blue small washbasin mixer 1 hole with pop-up waste |

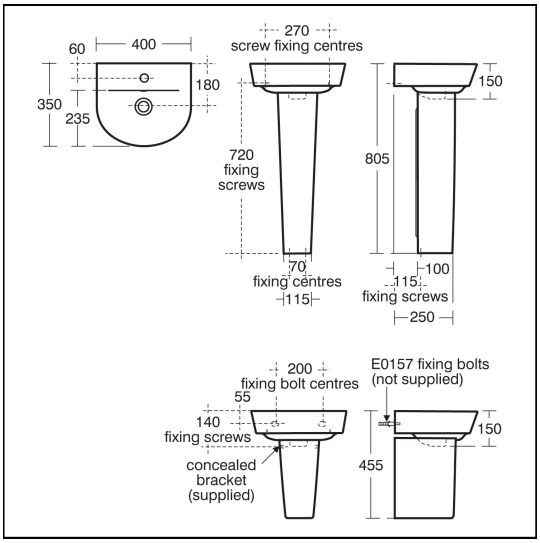


## ILLUSTRATED PRODUCT DETAILS

### Weights

| | |
|---|---|
| **E1388** | 8.00 KG |
| **E0782** | 5.75 KG |
| **E0157** | 0.16 KG |
| **A6588** | 1.30 KG |
| **S8803** | 1.00 KG |
| **S8910** | 0.20 KG |

### Materials

| | |
|---|---|
| **E1388** | Fine Fireclay |
| **E0782** | Fine Fireclay |
| **E0157** | Metal |
| **A6588** | Chrome Plated Metal |
| **S8803** | Chrome Plated Metal |
| **S8910** | Plastic |

### Finishes

| | |
|---|---|
| **E1388** | White (01) |
| **E0782** | White (01) |
| **E0157** | Neutral / No Finish (67) |
| **A6588** | Chrome (AA) |
| **S8803** | Chrome (AA) |
| **S8910** | Neutral / No Finish (67) |

### Flow rates

| | |
|---|---|
| **A6588** | 5 Litres per minute @ 3 bar pressure |

### Designer

Robin Levien, RDI

### Standards

Washbasin to BS EN 14688 and BS EN 31

### Special Notes

Washbasin mounted using E0157 wall fixing set, with semi pedestal with fixings provided or full pedestal mounted using 2 screws through the back of the basin (not supplied).



Ideal Standard (UK) Ltd. makes every effort to ensure that the information provided on its website is accurate. However, we cannot guarantee this, and accept no liability for any information or advice given via its website.

Ideal Standard