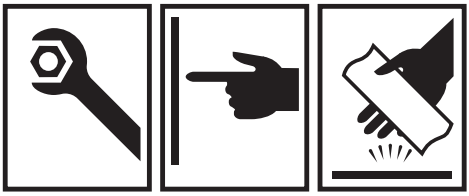

Armitage Shanks

Sensorflow 21 compact Low Pressure Urinal flushing devices

INSTALLATION INSTRUCTIONS

Panel mount:
A7058..
A7059..

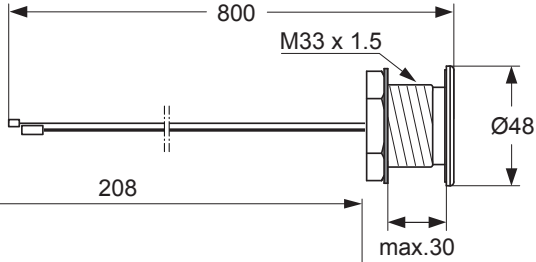

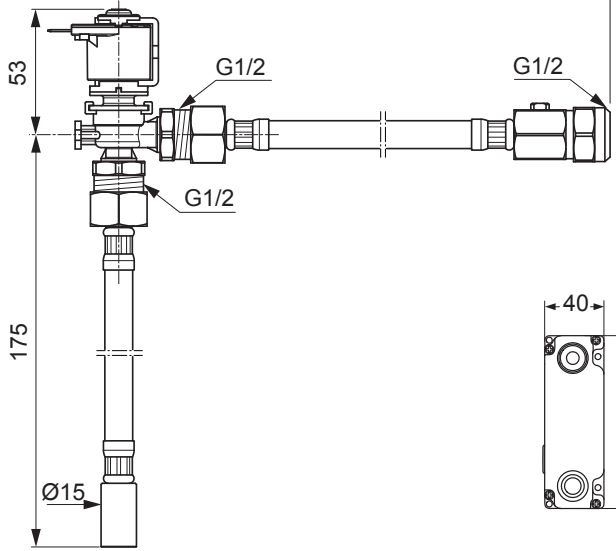

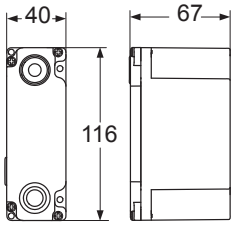

Important:

1. **Electrical connection:** mains electric powered versions of these products must be connected to a continuous permanent power supply.
2. **Sensor protector:** this black-out lens cover should only be removed from the sensor after completing installation & at least 20 seconds after powering up.

See page 3 for more details.

IMPORTANT
BEFORE CONNECTION, FLUSH WATER THROUGH PIPEWORK TO REMOVE ALL DEBRIS ETC. WHICH COULD DAMAGE THE VALVE MECHANISM

INSTALLER: After installation please pass this instruction booklet to user

TABLE OF CONTENT

Sensorflow 21 compact low pressure urinal flushing devices

These compact panel mount (PM) Sensorflow 21 electronic urinal flushing product is designed for water economy & hygienic “no-touch” operation.

The urinal flush is operated by the infrared sensor which detects the presence of the user in the sensing region. When the user moves away, the flush is triggered automatically. Water will flow for the preset run-time.

These products are intended to be supplied with cold water.

The PM design is available in 2 versions: Mains powered (transformed) with option to link up to 5 link units:

A7058.. is supplied with **mains power unit**
A7059.. is supplied with **link unit**
One mains unit (A7058..) can power up to five link units (A7059..)

Check the type of intallation and supply water pressure to select correct product for specific installation method.
Use the diagram below as a guide to select correct product code

	HIGH PRESSURE SYSTEM (HP)			LOW PRESSURE SYSEM (LP)
	AUTO CISTERN	DIRECTMAINS WATER SUPPLY		STORAGE TANK
		BOX RIM URINAL	STANDARD URINAL	
	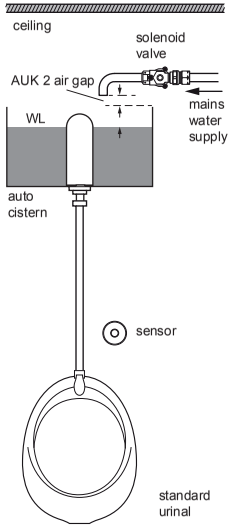	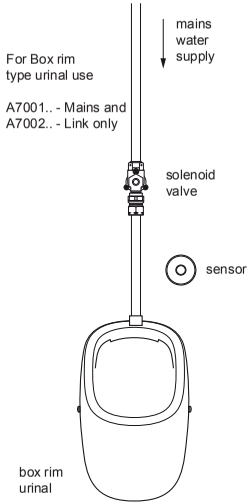	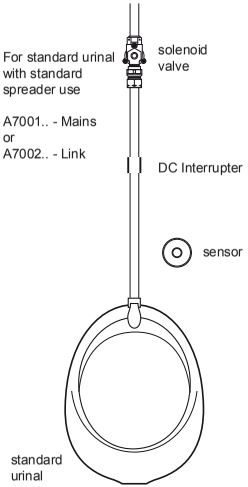	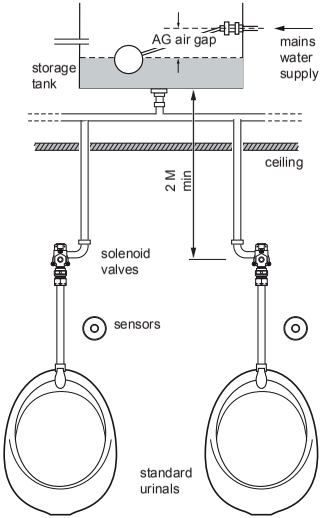
MAINS (SKU)	A7001..	A7001..	A7001..	A7058..
LINK (SKU)	A7002..	A7002..	A7002..	A7059..
F/R TYPE	30 L/M	30 L/M	6 L/M	-

1 IMPORTANT PRE-INSTALLATION NOTES

MAINS ELECTRICAL POWER SUPPLY
Mains powered Sensor Operated Products must be connected to a (fused / switched) **continuous permanent power supply**.

Connection to an **interrupted power supply** intended to stop electrical consumption in an unused facility, may adversely affect this sensor product and is therefore not recommended.

Each time the power supply is reinstated the product briefly enters reprogramming mode.

During reprogramming mode, any interaction (passive or active) with the product may alter the sensor settings in respect to range and / or run duration.

No significant savings will be achieved by connection to an interrupted supply. These products are intrinsically economical in terms of both water and electrical energy and will shut down in the event of a sensor being obstructed.

SENSOR PROTECTIVE COVER
This product is supplied with the sensor lens covered over with a black-out material.

DO NOT REMOVE this lens cover until the product installation has been completed & then wait for at least 20 seconds after powering-up.

The lens cover prevents the sensor from being unintentionally reprogrammed during the powering up sequence.

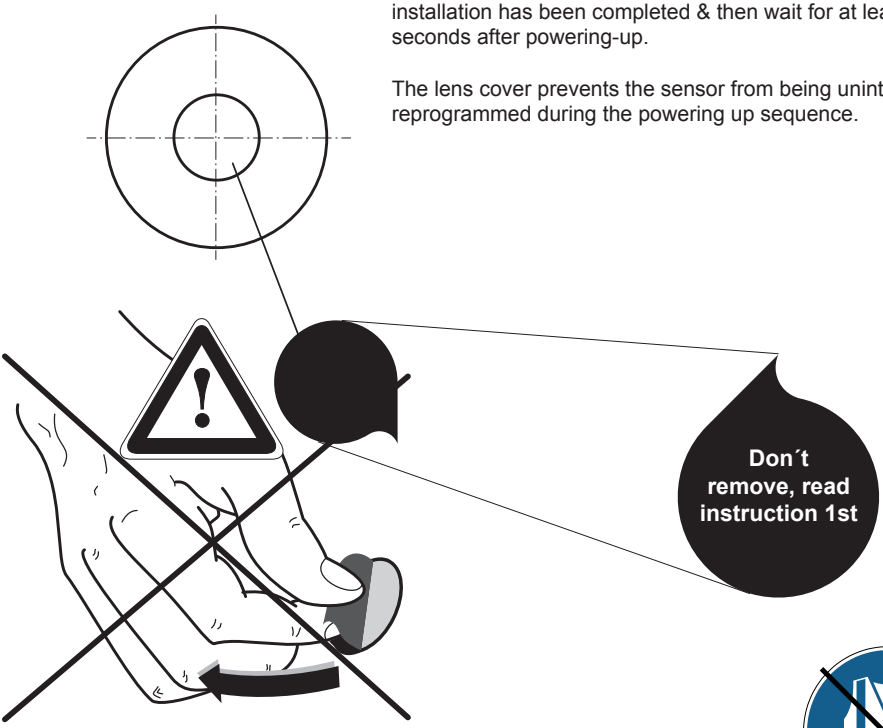

DURING SETTING UP PROCEDURE AVOID HIGH VISIBILITY CLOTHING

2 PRODUCT BOX CONTENTS

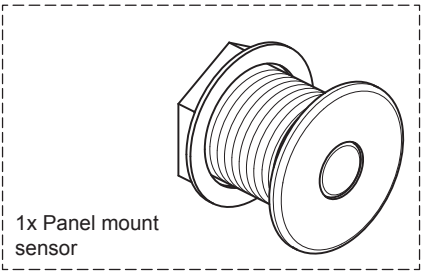

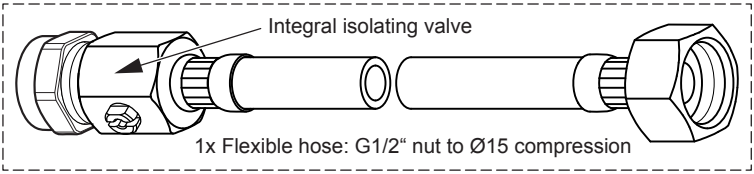

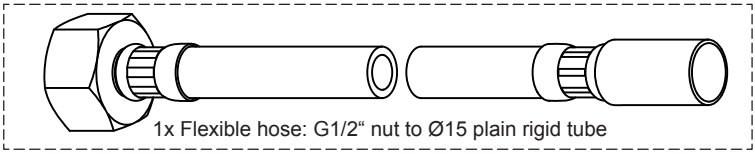

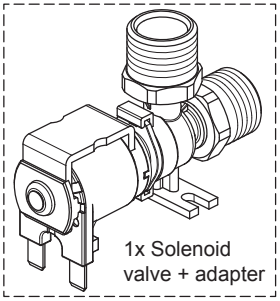

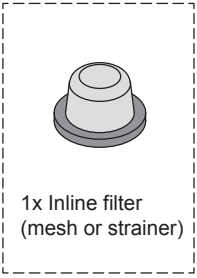

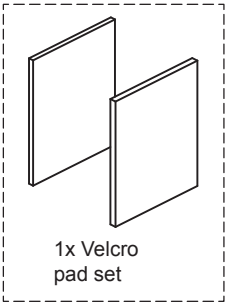

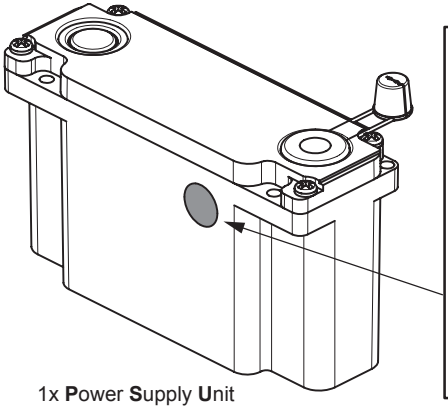

Each type of PSU is identified by this coloured dot system:

RED DOT — MAINS

BLUE DOT — LINK (Supplied with link cable)

Abbreviations & terminology used

PSU: **P**ower **S**upply **U**nit, either mains, battery or link versions.

PCB: **P**rinted **C**ircuit **B**oard inside the PSU.

RCD: **R**esidual **C**urrent **D**evice

SELV: **S**afety **E**xtra **L**ow **V**oltage

LINK PSUs: (up to 5 max) can be connected in series to a single mains PSU. Permitting washroom with multiple products to be run from a single mains supply point.

PM: **P**anel **M**ount

3 SUPPLY CONDITIONS

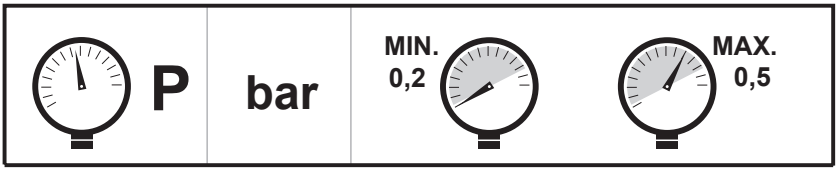

This product is intended to be supplied with cold water only.

3.1 Water regulations

The fittings covered by this installation and maintenance instruction should be installed in accordance with the water regulations published in 1999*, therefore Armitage Shanks would strongly recommend that these fittings are installed by a professional installer

*A guide to the Water Supply (Water Fittings) Regulations 1999 and the Water Byelaws 2000, Scotland is published by WRAS (Water Regulations Advisory Scheme) Fern Close, Pen-y-Fan Industrial Estate, Oakdale, Newport, NP11 3EH.
ISBN 0-9539708-0-9

4 URINAL PLUMBING ARRANGEMENTS

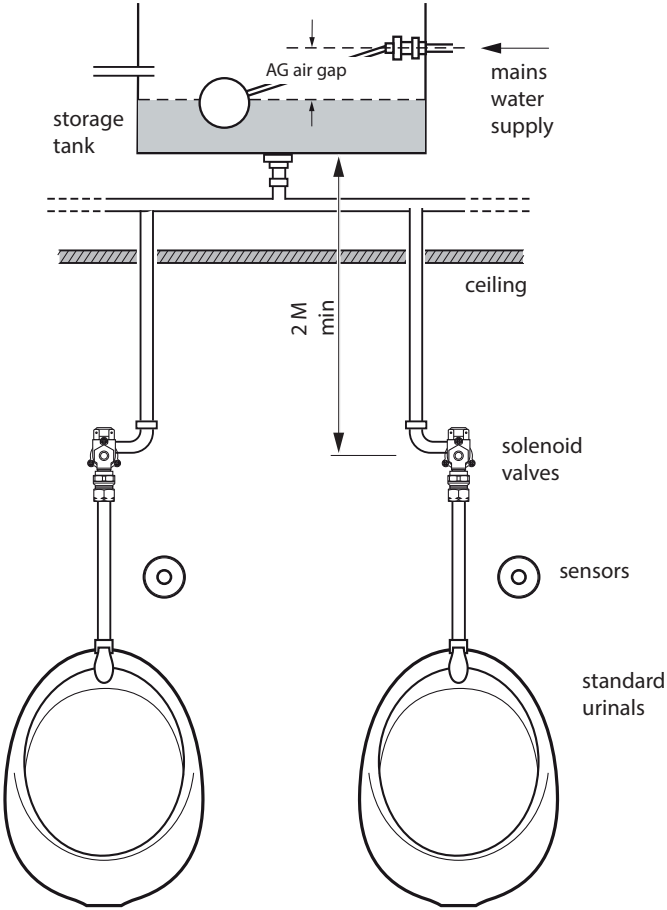

A **storage tank** installed at least 2M above the solenoid valve can be used to flush a standard urinal as shown.
The solenoid valve releases water directly from the tank each time the sensor is activated.
The storage tank is topped-up by mains water supply which is normally controlled by a float valve,
Storage tank system can supply water for flushing multiple urinals, as shown.

To achieve a 2M height, the storage tank may have to be installed above the washroom ceiling height.

General note: For all urinal flushing systems, maximum water fill rate (or discharge volume for flushing) must not exceed 1.5 litres per urinal activation. This ensures installation complies with water regulations.

NOTE: The flush **run time** should be adjusted to change the volume of water discharged when the sensor is activated. See section 7.

5 INSTALLATION GUIDE

Before connection, flush water through pipe-work to remove all debris etc. to prevent damage to the valve mechanism.

THEN ENSURE WATER SUPPLIES HAVE BEEN ISOLATED.

5.1 Mounting sensors

SENSOR POSITIONING: we recommend the sensor be mounted approximately as illustrated on the previous page. Where exposed pipe work has been installed, position the sensor alongside & above the urinal. For concealed pipe work installations, the sensor can be mounted centrally above the urinal.

Important: Ensure the sensor is positioned such that it will detect the presence of **the** user in front of the urinal.
SENSOR SHOULD NOT BE LOCATED DIRECTLY OPPOSITE A WALL MIRROR.

PANEL MOUNT (PM) SENSORS

1. Remove the sensor mounting kit if already assembled to the sensor housing tail. Ensure the rubber washer is in place behind the flange. Offer the sensor housing towards the panel hole.

Feed the cables & tail through panel hole. Push the sensor housing against the panel & ensure the rubber washer makes contact.

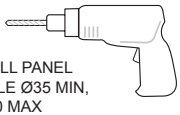

DRILL PANEL HOLE Ø35 MIN, Ø40 MAX

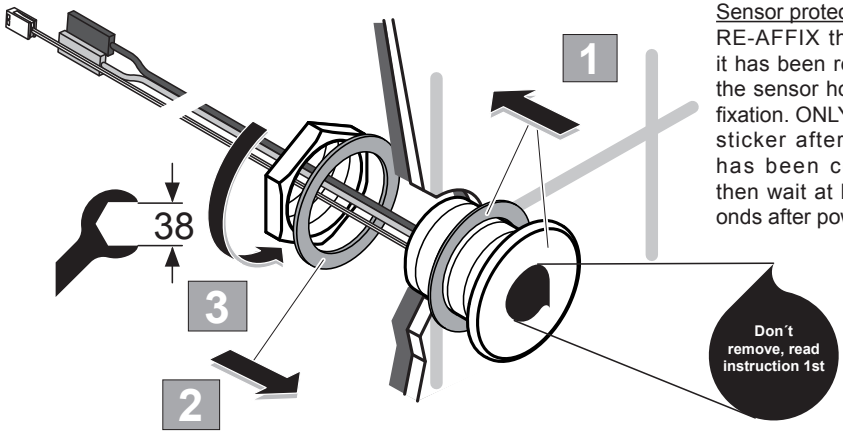

Sensor protective sticker:
RE-AFFIX this sticker IF it has been removed from the sensor housing during fixation. ONLY remove sticker after installation has been completed & then wait at least 20 seconds after powering up.

2. Fit the brass washer & back-nut onto the sensor housing tail as shown from behind the panel.

3. Hand tighten the nut against the brass washer until it makes contact with the rear of the panel. Ensure the sensor housing is positioned correctly, & then tighten the back-nut securely with an adjustable spanner - 38mm A/F

DO NOT REMOVE SENSOR PROTECTIVE STICKER.

CABLE COLOURS:
The cables emerging from the rear of the sensor are as follows: BLACK & RED cables will connect to the solenoid valve. GREY cable will connect onto the PCB inside the PSU. **Do not cut these cables.**

INSTALLATION GUIDE continued…

5.2 Plumbing Overview

Once the sensor has been secured to the panel or mounting surface, consideration should be given to installing & positioning of the solenoid valve.
Flexible hoses are supplied for installing on either side of the solenoid valve as shown.

In the plumbing installation example shown here, water is being supplied from above, but can be from any direction.

Observe the fixing leg on the solenoid valve to identify correct inlet side. Ensure water flows in the direction indicated.

A standard 15mm compression fitting can be connected on the plain Ø15 of the lower flexible hose.

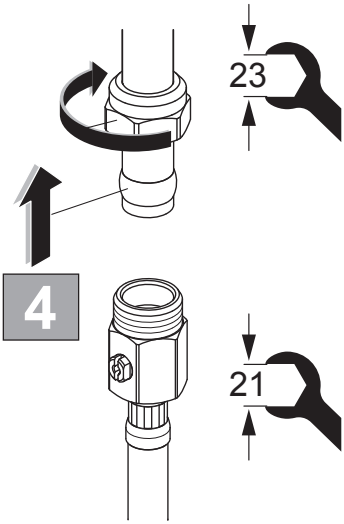

4. Slip the compression nut & olive onto the Ø15mm supply pipe. Push the isolating valve onto the supply pipe up to the shoulder. Slide the olive up to the isolating valve & tighten the compression nut (23mm A/F) with an adjustable spanner. Hold the isolating valve steady (21mm A/F) with a second adjustable spanner.

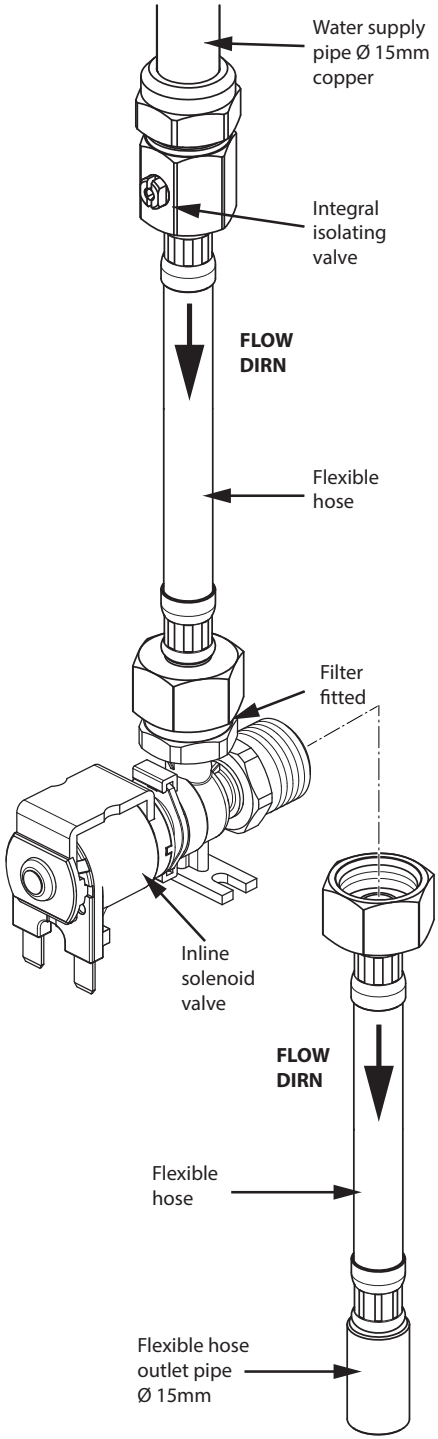

INSTALLATION GUIDE continued…

5. Fit the filter (mesh/strainer) into the top of the solenoid valve as shown, observing the flow direction arrow.

6. Hand tighten the nut of the upper flexible hose onto the solenoid valve. Make sure the solenoid valve is orientated such that the electrical connectors are easily accessible. Tighten the nut (24mm A/F) with a spanner by holding the solenoid valve steady. Taking care not to use excessive force on the nut & avoid twisting the flexible hose.

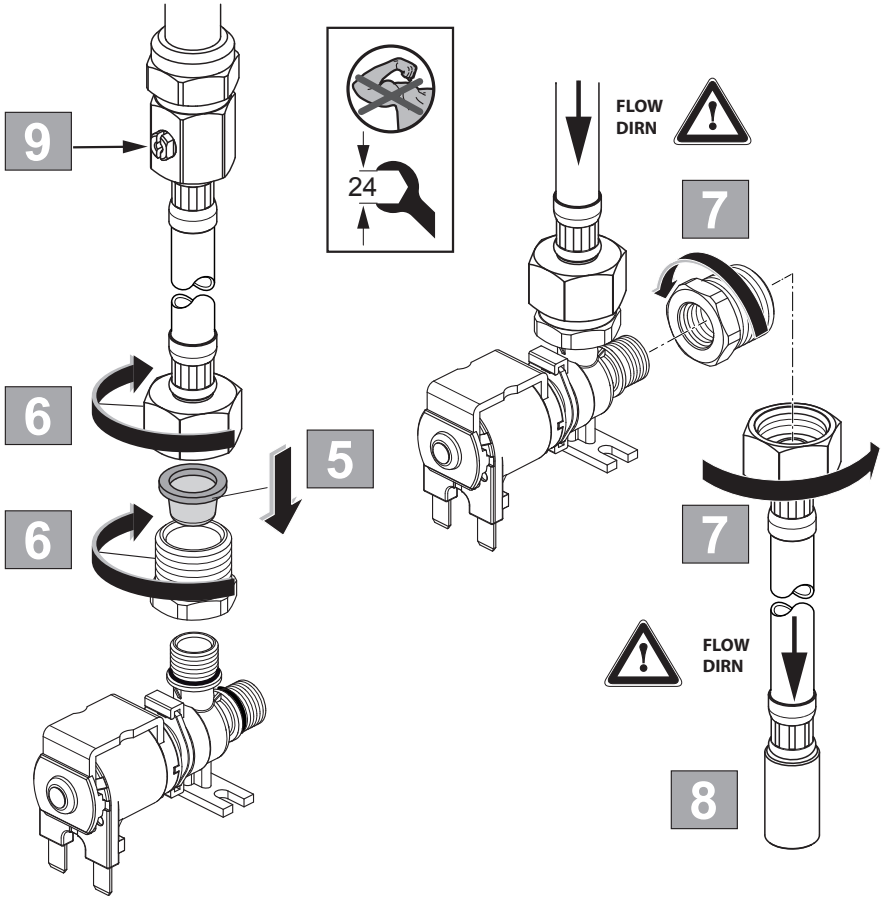

7. Tighten the nut of the lower flexible hose onto the solenoid valve using same method as 8.

8. Continue plumbing to the bottom of the lower hose, to a urinal. Connect using 15mm compression fitting.

9. Integral isolating/service valve
When the isolator screw slot is parallel to the valve body, the valve is open & permits water to flow. To close the valve, rotate the isolator screw 90°.

Check that all joints are securely tightened, test for leaks.

INSTALLATION GUIDE continued…

Flexible hoses (general notes)

Flexible hoses are supplied with these products.
Hold the flexi hose steady whilst tightening the nut.

Avoid sharp bends, twisting, kinking & stretching these hoses as this may result in damage.

Take care not to use excessive force on the nut.
On the nut side, a seal is integral & requires little force to seal.

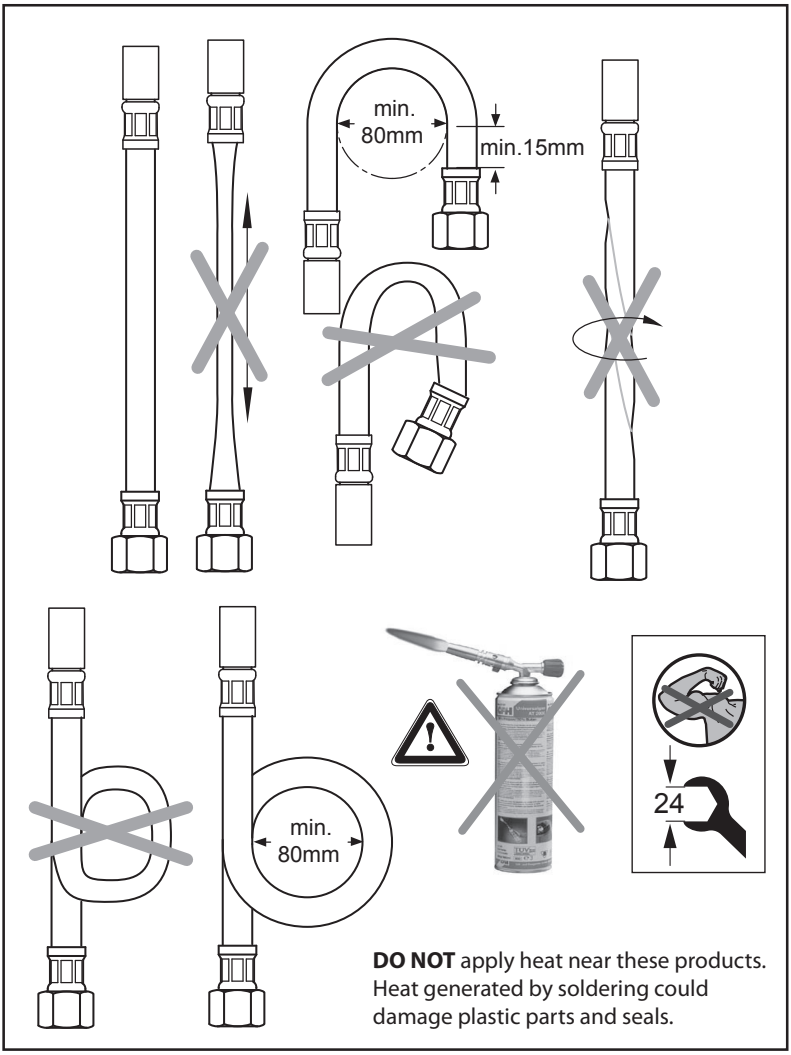

DO NOT apply heat near these products.
Heat generated by soldering could damage plastic parts and seals.

5.3 Electrical connection

Connection of this product to mains power supply should be undertaken by a competent person and should conform to IEE Wiring Regulations

Orientation & position of solenoids, and PSU (**P**ower **S**upply **U**nit) case can differ from installation to installation.

With the product securely mounted to the panel & plumbed-in, electrical work can commence.

10. Locate the end of the red & black cable which emerges from the rear of the sensor.This cable length is approx 800mm.

Connect the cable to the solenoid valve terminals as shown. Observe the + and – symbols marked on the solenoid valves, connect the red cable to + & black to -.

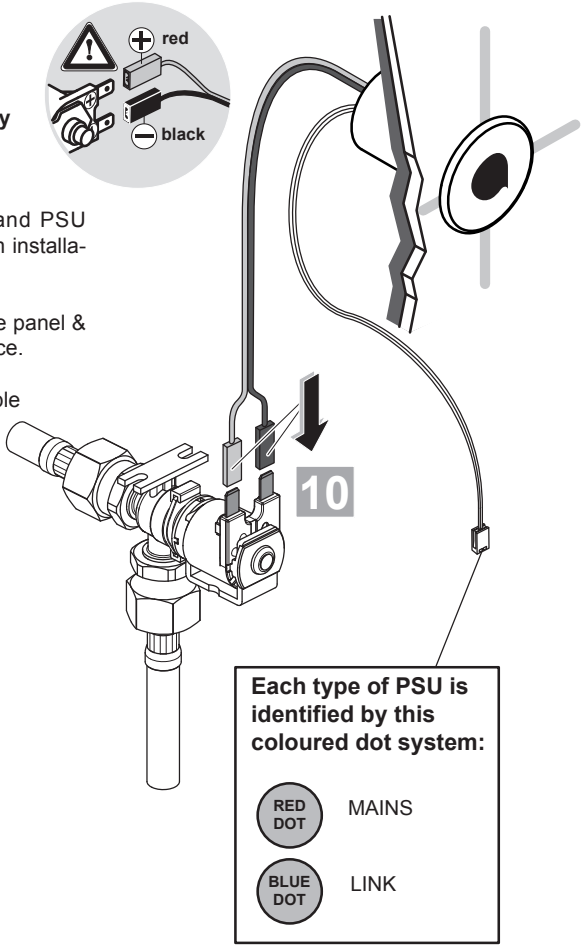

INSTALLATION GUIDE continued…

Refer to the diagram on the next page for PSU connection options.

Electrical information & approvals:

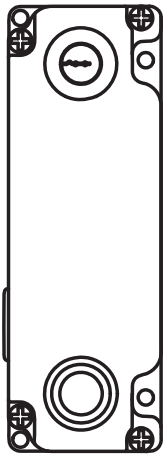

Power: **6W**

Input voltage:
100V - 240V~ 50 - 60Hz

Protection class: **II**

Approval EU:
EN 60950, EN 60335

Approval UL: **UL 1310**

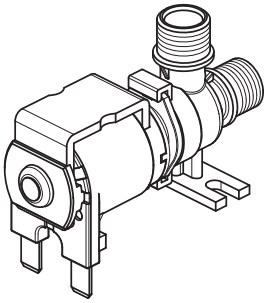

DIN EN 60730-1: Type 1

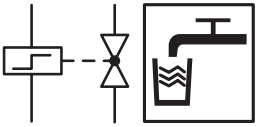

INSTALLATION GUIDE continued…

Electrical connection continued…

ENSURE MAINS POWER SUPPLY IS SWITCHED OFF BEFORE COMMENCING

11. Open the PSU case by unscrewing 4x posi-drive screws.

12. The lid & seal should separate from the PSU case.

13. For mains version, slide out **P**rinted **C**ircuit **B**oard (PCB).

14. For mains version, press out the "knock-out" at the base of the PSU case for mains cable entry.

15. For link version, slice the grommets fitted in the side wall of the PSUs to allow entry for the link cable(s).

16. For mains version, fit a grommet into the hole in the base of the PSU. Feed the power supply flexible cable through this grommet & make connections to terminal block on the PCB. Refer to **26.**

17. For link version, feed the link cable through the side wall grommet in the PSU & plug it onto one of the sockets on the PCB. Refer to **26.**

ALTERNATIVELY, the link cable can be routed through the PSU lid as shown in 22, along with the sensor cable.

18. Slide the PCB back into the PSU ensuring cables are not trapped.

19. For link version, plug the other end of the link cable into the socket on the link PCB.

20. For link versions, plug additional link cables into the sockets on the link PCB.

21. Slide the link PCB back into the PSU ensuring cables are not trapped.

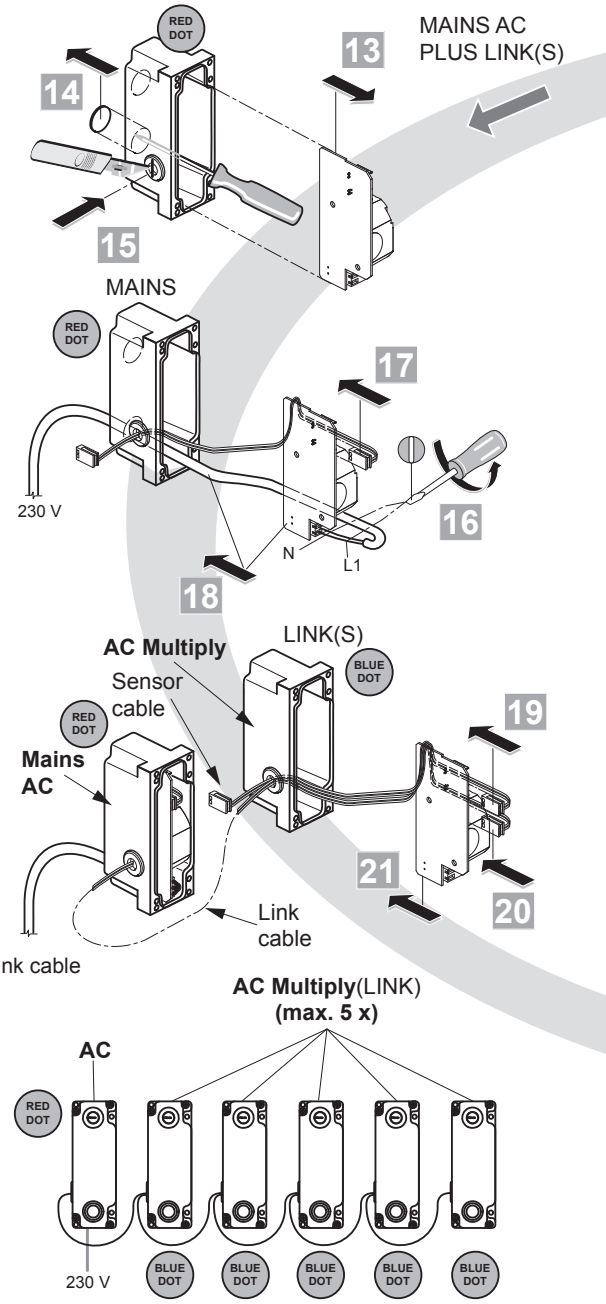

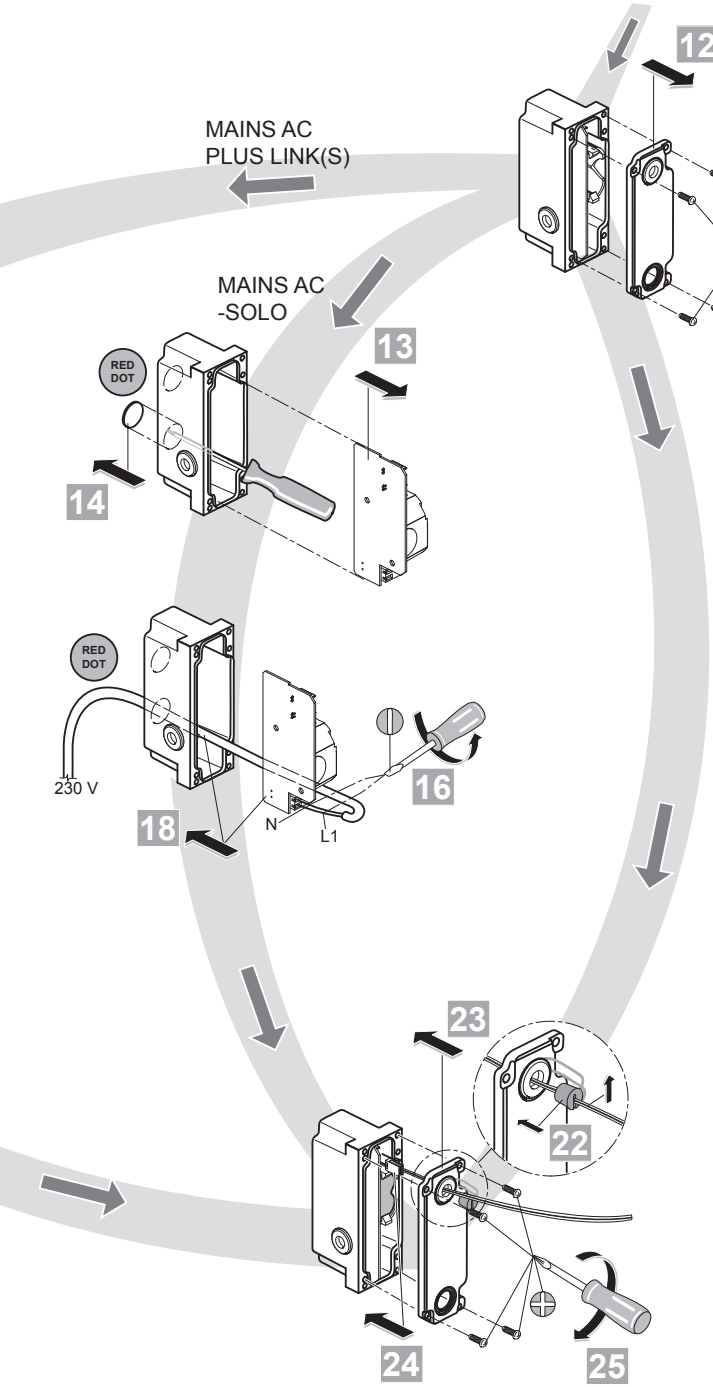

Each type of PSU is identified by this coloured dot system:

RED DOT — MAINS

BLUE DOT — LINK

22. Remove the pre-split grommet from the PSU lid. Slide the grey sensor cable into this grommet.

23. Slide the sensor cable terminal through the PSU lid & plug into one of the sockets on the PCB. Press grommet securely into the lid.

24. Mate the PSU lid to the PSU case, ensuring seal is in place. Avoid trapping any cables.

25. Refit the 4 lid screws securely.

INSTALLATION GUIDE continued…

Electrical connection continued…

26. Mains power cable (not supplied) should be flexible 3A rated (multi-strand) 2 core cable. Prepare the cable for connection into the PCB by carefully stripping back the outer sheath by about 100mm. Strip the wire ends back by about 5mm.
PCB connection: the appropriate wires of the mains cable should connected to the appropriate terminal on the block. The PCB is marked L1 for the live wire & N for the neutral wire.
IMPORTANT: Ensure terminal block screws are firmly tightened & clamp the wires securely.

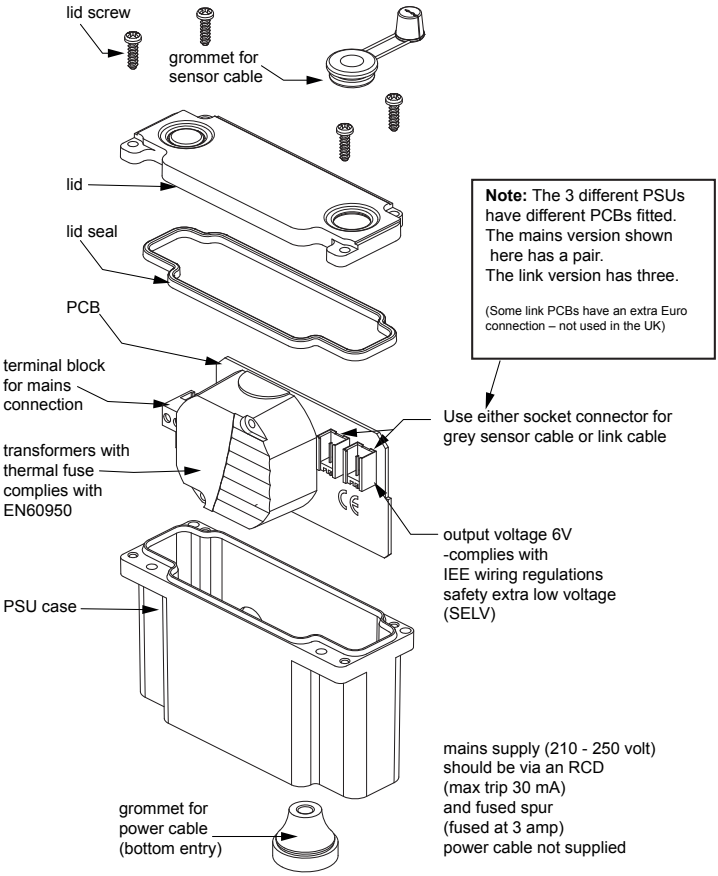

Shown above: Mains Power Supply Unit (PSU)

Other cable information:
The two cables that emerge from the rear of the sensor both have nominal lengths of 800mm.

BLACK & RED cable will plug onto the terminals on the solenoid valve.

GREY cable (with black line) will plug into one of the sockets on the PCB inside the PSU.

Link cable is also GREY (with black line), length is 1.5M (supplied with link product only)

INSTALLATION GUIDE continued…

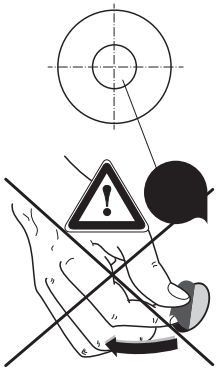

Electrical connection continued…

A pair of self-adhesive Velcro-type pads are provided. Attach one to the side of the PSU case & the other to a suitable location on the rear of the mounting panel.

Ensure the selected location does not stretch/stress the cables. Consideration should also be given to keeping the PSU case within easy reach/ access for maintenance staff.

IMPORTANT:
Leave the sensor protective sticker in place for at least 20 seconds after powering-on the product. See section 7 regarding sensor ranging.

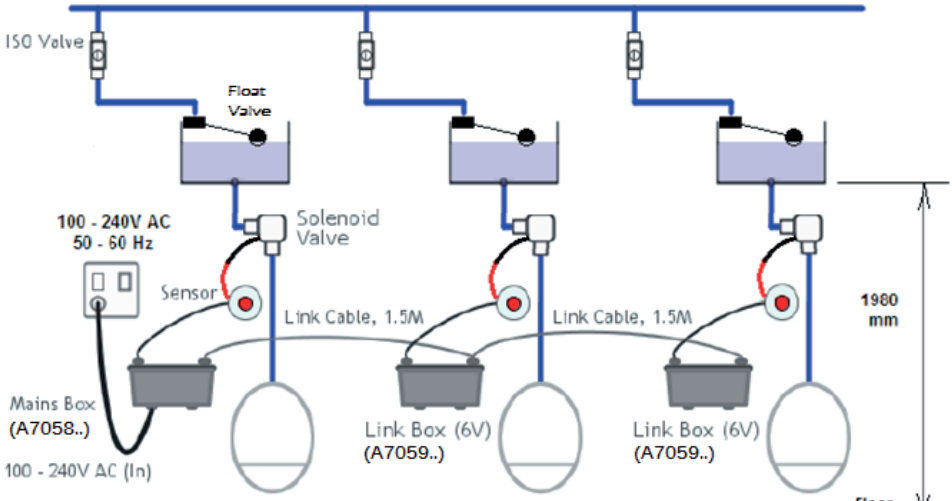

Example above of a urinal installation where 1st PSU is mains plus 2x link PSUs.

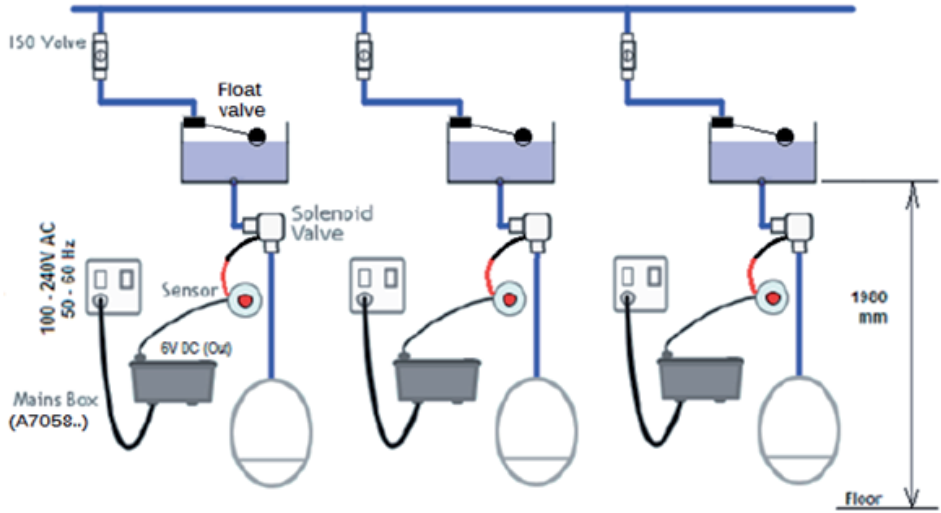

Example above of a urinal installation where PSUs are all mains versions

6 URINAL OPERATION

Sensorflow 21 products use an Infrared Sensor to activate the system. The sensor is triggered by something reflective (normally the user) in the Sensing Region.

1. User to stand in front of the sensor / urinal bowl for at least 8 seconds.
2. When the user moves away, there will be a courtesy pause of 2 seconds.

3. The solenoid valve will turn on for the set Run Time (adjustable).

If the urinal is not used for 24 hours, the solenoid valve will open for a preset period (auto flush time). This is adjustable using a programming hand unit.

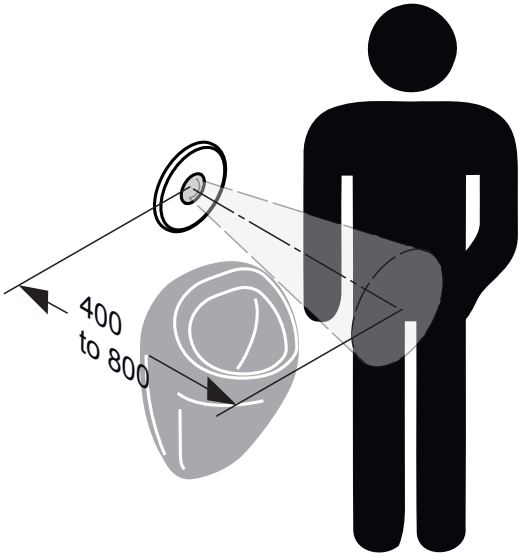

7 SENSOR RANGING & RUN TIME ADJUSTMENT

(SENSOR SHOULD NOT BE LOCATED DIRECTLY OPPOSITE A WALL MIRROR.)

The sensing range & run time can both be adjusted.

Default factory settings are 400mm range & 4 seconds run time.
Run time of 4 to 10 secs is considered satisfactory for most applications. Too short a run time will reduce the frequency at which an auto cistern flushes. A long run time can increase water consumption.

This can be done in one of two ways: (A) manually or by (B) using a remote sensor programming unit with some manual actions.

A. Manually Changing Sensor Range

1. Turn power to sensor OFF. Wait 60 secs, turn power back ON.
2. Red light in the sensor flashes quickly for 5 secs (approx 2 flashes per sec).
3. While the light is flashing, move a hand close to sensor (30 to 50mm).
4. When the light stops flashing, it goes to solid red (stays ON). Take hand away from the sensor.
5. Stand in front of the urinal at the required distance (range 400 to 800mm).
6. Wait 5 seconds until sensor light starts to flash again. (Range is now set).

Manually changing run time (with run times restricted)

If required to change run time, carry out steps 1 to 6, then
7. IMMEDIATELY move hand very close to the sensor.
8. After 5 secs., the fast flashing red light in the sensor will flash slowly (1 flash every 2 secs.).
9. Count slow flashes; take hand away from sensing region after required number of flashes:

Number of flashes	1	2	3	4	5	6	7	8	9	10
Run time (seconds)	1	3	3,5	4	4,5	5	5,5	6	6,5	0

i.e.: By taking hand away after 3 slow flashes, the run time will have been set to 3.5 seconds

General fill rates & capacities

In accordance with the water regulations published in 1999 where automatically operated pressure flushing valves are used for flushing urinals, the should not exceed 1,5 litres per bowl each time the device is operated and consideration should be given to adjusting the flush time to ensure compliance.

DURING SETTING UP PROCEDURE AVOID WEARING HIGH VISIBILITY CLOTHING IN FRONT OF THE SENSOR

SENSOR RANGING & RUN TIME ADJUSTMENT continued…

B. Remote sensor programming unit is a hand held unit which can be used to change sensor range & other functions if required. Detailed instructions for using this unit are provided with the unit.
(This unit can be purchased separately, for spares code see section 11).

The full range of run times is available using the remote programming unit.
The run time can be set from 0.25 to 10 seconds in 0.25 second intervals.
i.e.: 0.25, 0.5, 0.75… 5.0, 5.25, 5.5, 5.75… 9.5, 9.75, 10.

> See section 8.2 for a quick overview of how to use this programming unit to adjust the hygiene flush settings.

8 MAINTENANCE

8.1 SOLENOID VALVE

If water continues to flow when the valve should be off, and if the sensor is correctly ranged, then the solenoid valve may have debris lodged on the valve seat:

- Locate the solenoid valve.
- Isolate the water supplies.
- Disconnect the solenoid valve cables.

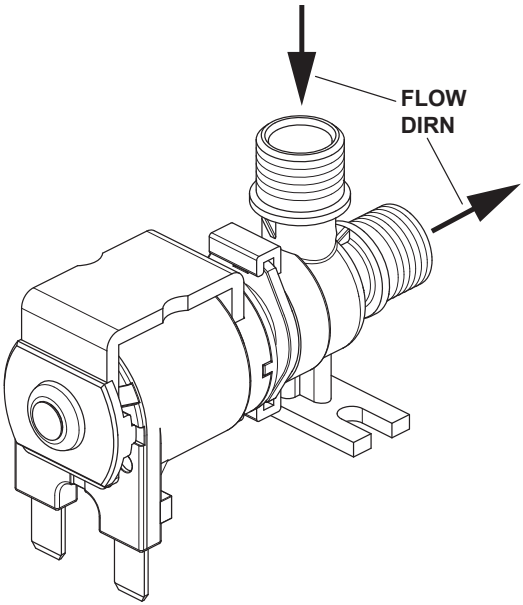

Maintenance continued…

- Turn the coil assembly 90 degrees clock wise or anticlockwise
- Lift off the coil assembly
- Clean the debris of the valve
- Re-assemble solenoid valve
- Reconnect the solenoid valves cables
- Test the solenoid valve & ensure it is working correctly

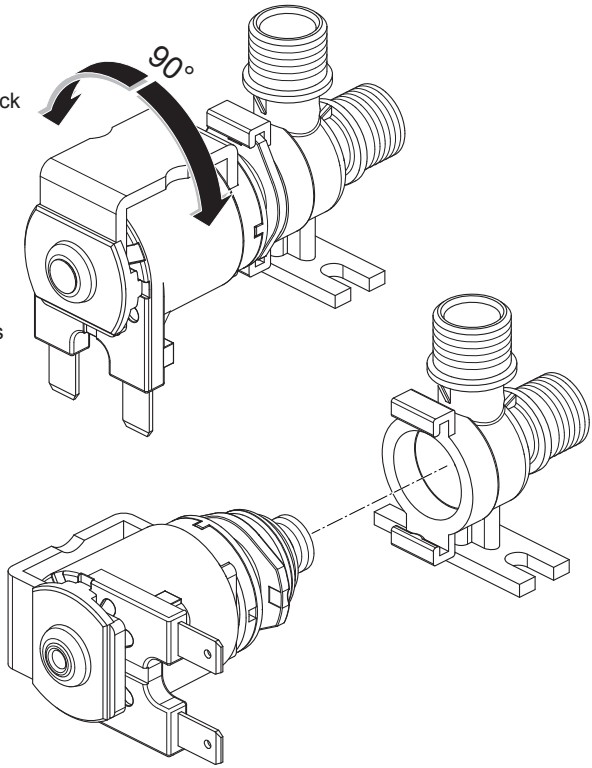

8.2 Hygiene flush (Automatic)

This hygiene flush is enabled on the urinal products and can be adjusted by the installer or maintenance staff using the optional remote programming unit (for part number see sect.10).

The hygiene flush is used to combat periods of stagnation due to low usage of the product. The function activates the flush automatically if it hasn't been used for a set time period. This function ensures regular movement of water combating bio film growth and bacteria colonisation.

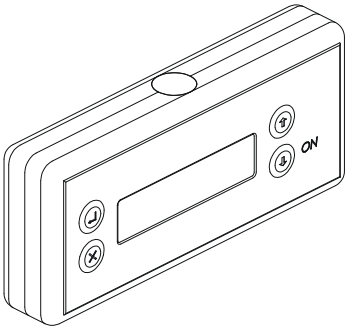

The programming unit should be held pointing towards the sensor at distance of approx. 100mm.

Once enabled, this function will automatically turn the water on for a duration of 1 to 240 seconds if the product has not been used for a period of 6, 12, 24, 48, or 72 hours.

Consider the Run Time necessary to activate a flush if desired i.e.: 7 uses x 6.5secs = 46secs.

For full details on how to enable this function, refer to the programming instructions supplied with programming unit.

Keep hand unit away from the water flow, avoid getting it wet.

Maintenance continued…

A brief summary of how to navigate the programming unit is as follows:

a) Hand unit ON

b) Navigate to Menu ***4 PARAMETER***

c) ***SENSOR 2013*** (Enter)

d) ***MENU 4.4 URINAL*** (Enter)

e) ***AUTO-RINSE FREQUENCY: OFF***
ARROW UP (To required Delay time) (Enter). Recommended: 6 or 12 hours.

f) ***AUTO-RINSE DURATION:*** (15 sec default)
ARROW UP or DOWN (To required Run Time). Recommended: 8sec (max).

g) Point towards Sensor (approximate distance 100mm)

h) Press ENTER

i) ***TRANSMISSION OK*** - if successfully programmed;
ERROR COMMUNICATION 2– if programming failed

j) Press ESCAPE (X) to get ***BACKUP FUNCTION***

k) With BACKUP FUNCTION, previous settings are 'Remembered'
- just point at next Tap / Sensor and press ENTER to repeat.

l) Hand unit turns itself off after 2 minutes of non-use.

Note: Older handset units will display (c) **SENSOR 2008** (or 2003) by default.
Failed program output message will be (i) **ERROR COMMUNICATION 3.**
Latest handset can program all previous sensor versions 2013, 2008 & 2003.

9 CLEANING CHROME SURFACES

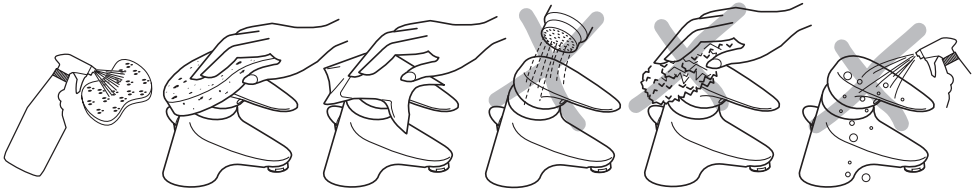

When cleaning chromed products use only a mild detergent, rinse & wipe dry with a soft cloth. Ideally clean after each use to maintain appearance.

Never use abrasive, scouring powders or scrapers. Never use cleaning agents containing alcohol, ammonia, hydrochloric acid, sulphuric acid, nitric acid, phosphoric acid or organic solvents. Use of incorrect cleaning products / methods may result in chrome damage which is not covered by the manufacturer's guarantee.

10 SPARE PARTS

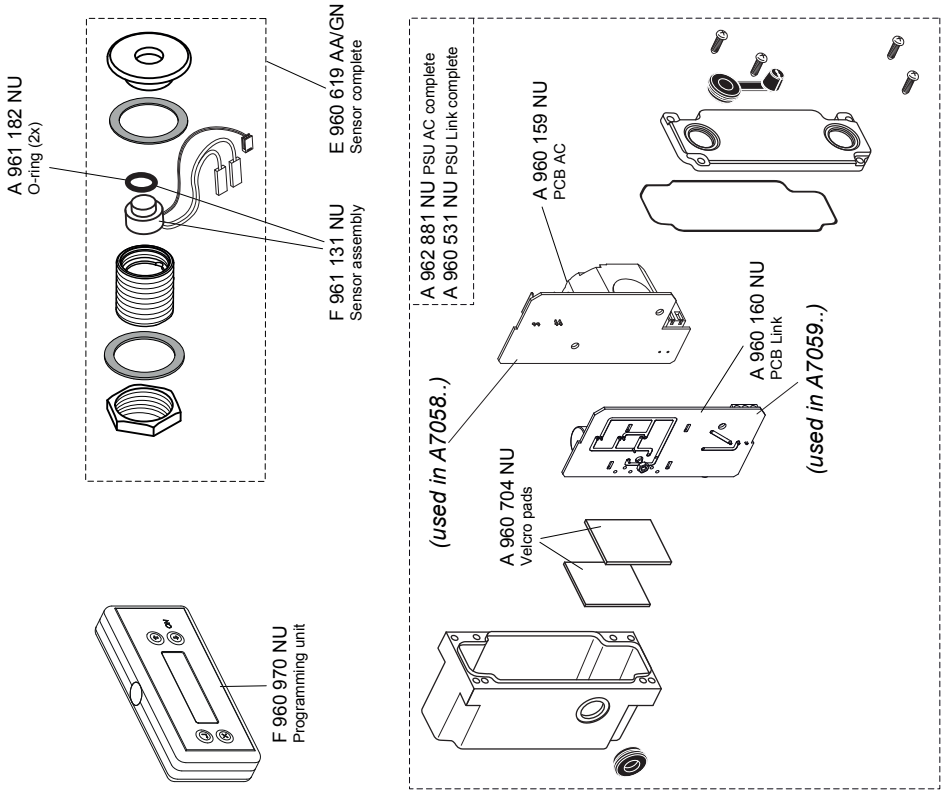

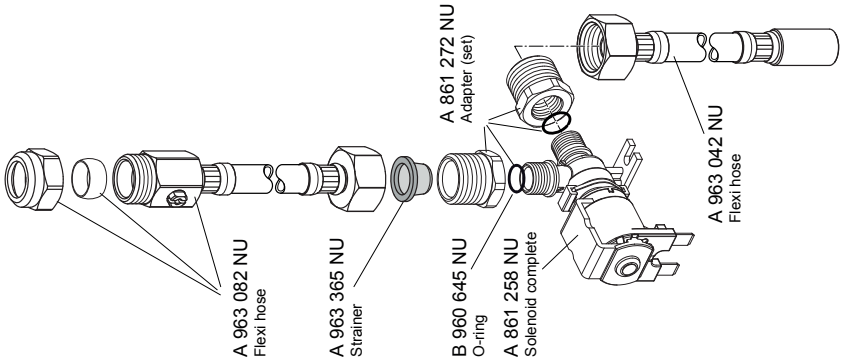

For more information about our products visit our websites:

www.armitage-shanks.co.uk
www.idealspec.co.uk
www.fastpart-spares.co.uk

AFTER SALES NON RESIDENTIAL HELPLINE

0870 122 8822

AFTER SALES NON RESIDENTIAL FAX

0870 122 8282

E-MAIL
aftersalesnonresidential@idealstandard.com

1117 / A 868 401
Made in Germany

Armitage Shanks pursues a policy of continuing improvement in design and performance of its products.

This right is therefore reserved to vary specification without notice.

Armitage Shanks is a division of Ideal Standard (UK) Ltd

Armitage Shanks
The Bathroom Works, National Avenue
Kingston-upon-Hull, HU5 4HS England

Armitage Shanks

Ideal Standard International NV
Corporate Village - Gent Building
Da Vincilaan 2
1935 Zaventem
Belgium