Nimbus 21 Bib taps 1/2"

ILLUSTRATED

B1675 Nimbus 21 bib taps 1/2" anti vandal spray outlet pair
B1686 Nimbus 21 concealed bib tap wall mount with self centralising installation (pair)

OPTIONS

B1688 Nimbus 21 exposed bib tap wall mount with self centralising installation (pair)
B1682 Nimbus 21 1/2" x 75mm bib tap extensions (pair)
B1684 Nimbus 21 1/2" x 100mm bib tap extensions (pair)

ILLUSTRATED PRODUCT DETAILS

Materials

B1675 Chrome Plated Brass
B1686 Chrome Plated Brass

Finishes

B1675 Chrome (AA)
B1686 Chrome (AA)

Special Notes

Easy grip handles. Half turn ceramic disc valves for better control. Self centralising feature simplifies upright installation. Bib taps require either concealed or exposed wall mounts. 75 and 100mm extensions are available.

3.7 lpm Eco spray outlet

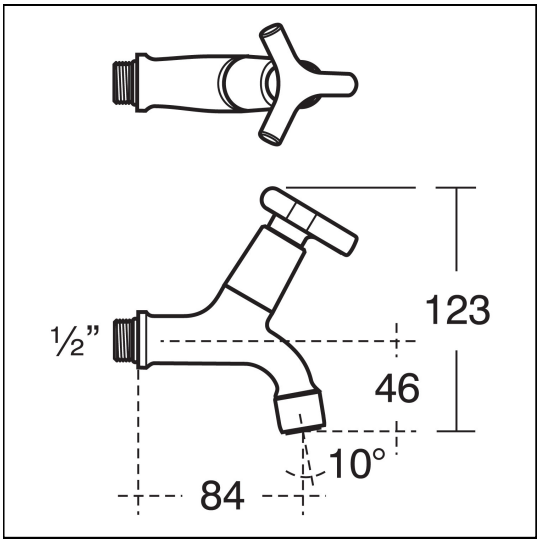

ACCREDITATIONS

WRAS APPROVED PRODUCT
1906015

FEATURES

Ideal Standard (UK) Ltd. makes every effort to ensure that the information provided on its website is accurate. However, we cannot guarantee this, and accept no liability for any information or advice given via its website.