Concept 170 x 75cm Asymmetric Idealform Plus+ Bath RH

ILLUSTRATED

E1539	Concept 170 x 75cm asymmetric Idealform plus+ bath right hand with no taphole
E1541	Concept 170cm asymmetric bath front panel
S8970	Trap 1½" plastic P with 75mm seal, multi-purpose outlet suitable for plastic and BS copper pipe
E1486	Luxury bath pop-up waste and overflow

OPTIONS

A5901	TMV thermostatic mixing valve 22mm

ILLUSTRATED PRODUCT DETAILS

Weights

E1539	36.08 KG
E1541	4.80 KG
S8970	1.00 KG

Materials

E1539	Idealform Plus+
E1541	Acrylic
S8970	Plastic
E1486	Mixed Material

Finishes

E1539	White (01)
E1541	White (01)
S8970	Neutral / No Finish (67)
E1486	Chrome (AA)

Capacity

E1539	187.0 litres (to overflow)

Designer

Robin Levien, RDI

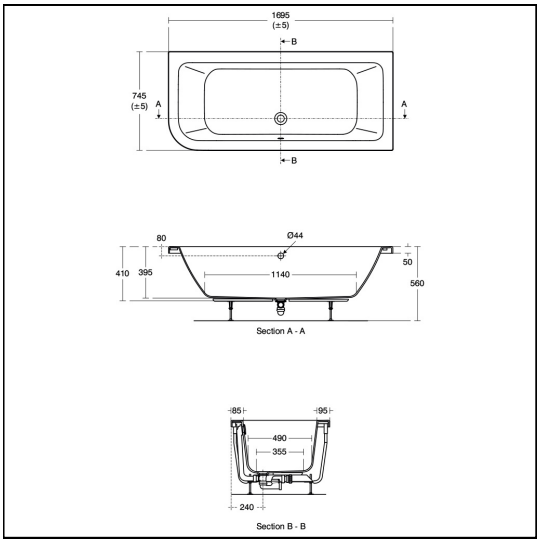

Standards

Constructed to EN 198:2008. EN 14513

Special Notes

Consideration should be given to safe hot water delivery and the use of an appropriate temperature reduction device see A5901AA or Part G for guidance. One tap hole fittings require offsetting from the overflow. Check positioning and compatibility before specifying.

Ideal Standard (UK) Ltd. makes every effort to ensure that the information provided on its website is accurate. However, we cannot guarantee this, and accept no liability for any information or advice given via its website.