Concept 170cm x 75cm Idealform Plus+ Bath No Tapholes

ILLUSTRATED

E8602	Concept 170 x 75cm Idealform plus+ bath with no tapholes
B0730	Tempo 2 hole bath filler
E4797	Unilux Plus+ 170cm front panel for Idealform Plus+
E4832	Unilux Plus+ 75cm front bath panel for Idealform Plus+
E1486	Luxury bath pop-up waste and overflow

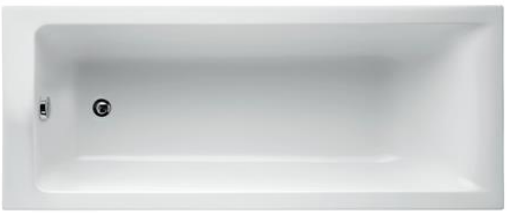

OPTIONS

S8830	Waste 1½" bath chain and overflow, plastic plug
A5901	TMV thermostatic mixing valve 22mm

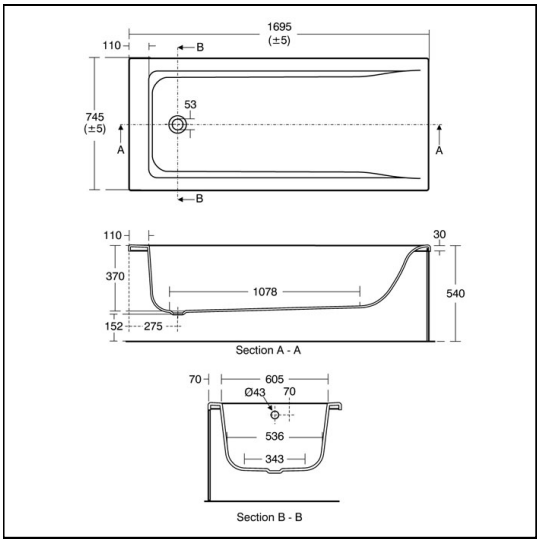

ILLUSTRATED PRODUCT DETAILS

Weights

E8602	28.50 KG
B0730	2.64 KG
E4797	3.65 KG
E4832	2.58 KG

Materials

E8602	Idealform Plus+
B0730	Chrome Plated
E4797	Acrylic
E4832	Acrylic
E1486	Mixed Material

Finishes

E8602	White (01)
B0730	Chrome (AA)
E4797	White (01)
E4832	White (01)
E1486	Chrome (AA)

Capacity

E8602	186.0 litres (to overflow)

Flow rates

B0730	50 Litres per minute @ 3 bar pressure

Designer

Robin Levien, RDI

Standards

Constructed to EN 198:2008

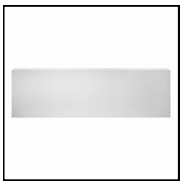

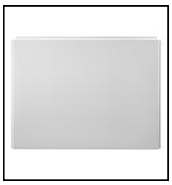

FEATURES

E: info@idealspec.co.uk | T: 0870 122 8822 | F: 0870 122 8282 | www.idealspec.co.uk

Ideal Standard (UK) Ltd. makes every effort to ensure that the information provided on its website is accurate. However, we cannot guarantee this, and accept no liability for any information or advice given via its website.